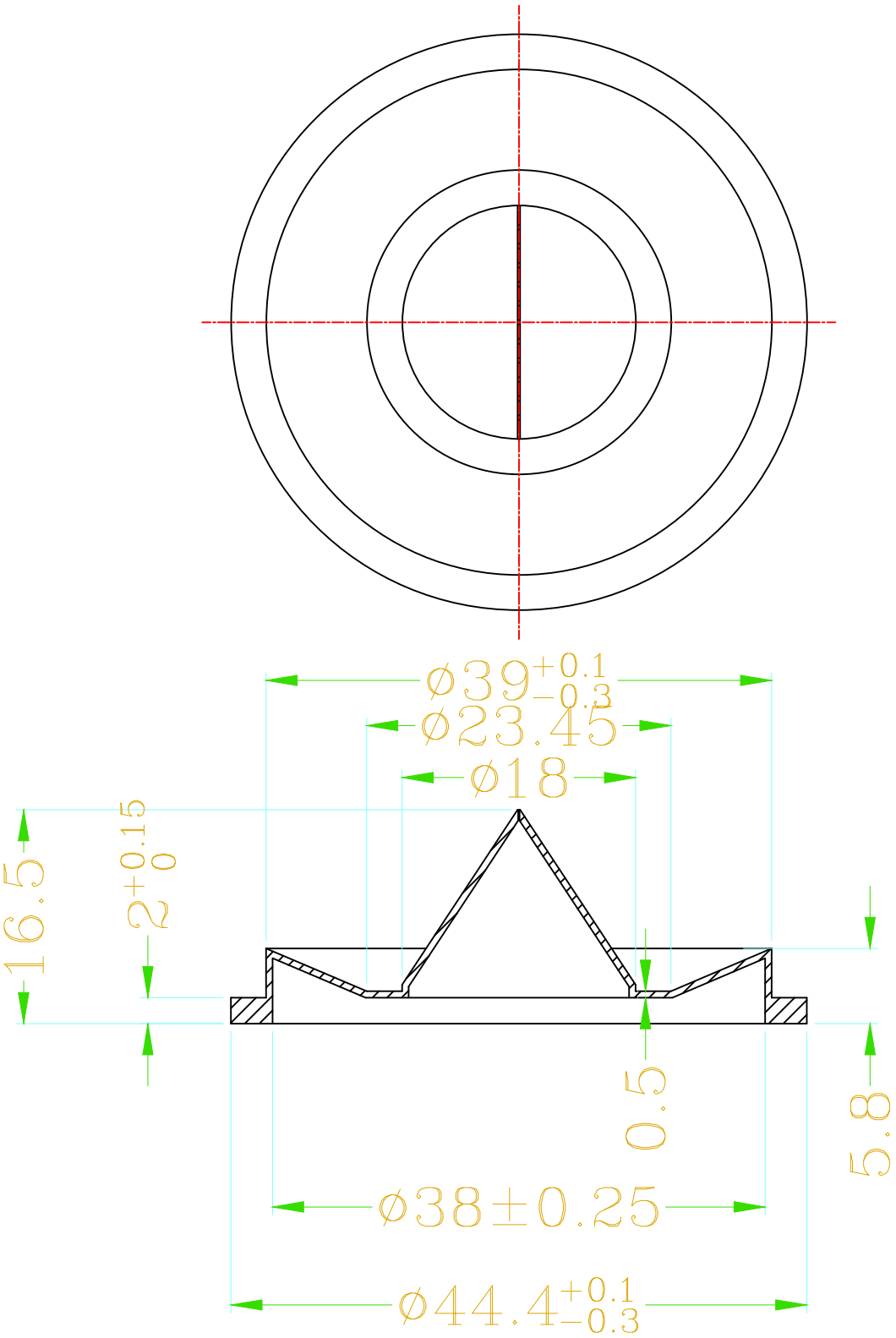
ø39 +0.1 −0.3
ø23.45
ø18
16.5
2 +0.15 0
0.5
5.8
ø38±0.25
ø44.4 +0.1 −0.3